Quarterly No. 62 January 1991

FOMRHI Quarterly

COMMUNICATIONS

FELLOWSHIP OF MAKERS AND RESEARCHERS OF HISTORICAL INSTRUMENTS
Hon. Sec.: J. Montagu, c/o Faculty of Music, St. Aldates,
Oxford OX1 1DB, U.K.

FELLOWSHIP of MAKERS and RESEARCHERS of HISTORICAL INSTRUMENTS

Bulletin 62 **January, 1991**

A HAPPY NEW YEAR to about half of you, which is considerably better than some years, may be better still when the next list of renewals comes from Barbara before I finish this off, and better still by the time it goes out. So thank you, all of you who have made the effort to renew on time. It does help us.

Thanks, too, to those who have added something for those who can't convert currency. I'll let you know next Bull how the figures compare: the number who are paid for and the number we have. My initial reaction is that we can afford to help more people like this if you know of any who would like to receive the Q, so do let me know of names and addresses. Sometimes I hear of people quite coincidentally whom the chap I'm talking to has known for years and has never got round to telling me about.

Thanks, too, to two of you for information on the German postcodes. The only snag is that Uta Henning says "*we are advised to use W (= Western) for the former D, and O (= Osten) for the former DDR*", whereas Paul Madgwick says "*The German Post Office says addresses in West Germany have post codes starting with D; addresses in East Germany have post codes starting with O*". It sounds as though the German Post Office is as confused as ours! Anyway, at least we know that all the old DDR should be O until they sort out new numbers (if they ever do; it'll be a major job), and we can choose between D and W for the old D. Me, I'll stick to D simply because it's easier to leave one the same and because one day it'll presumably all be D. I'll not put any corrections in the Members List Supplement herewith but will wait for the new complete List in April. If anybody hears of any different formulæ between now and then, I'd be grateful to hear of it.

FURTHER TO: Bull.58 (and 61 p.3): Donald S Gill says "*Further to Carl Willett's query about woodworm, I too had read somewhere that a domestic freezer reached temperatures low enough to kill woodworm. Since I am an experimentalist rather than a theoretician I decided to put your query about cracking to the test. I placed a dud recorder and a dud crumhorn in my freezer for ten days and then took them out and allowed them to thaw. I can report that I now have a dud recorder and a dud crumhorn without any cracks in them. So freezing doesn't improve an instrument* [wouldn't it be nice, and a turn-up for the books, if it did? JM] *but it doesn't do any damage to it either. For the record, the crumhorn was bare wood; the recorder had an oiled bore and the outside a beeswax finish. The main problem is thinking up answers to the question 'why have you got a recorder in your freezer?'!*"

Typing this (Don hasn't got a typewriter) has reminded me that when this was first suggested to me, last summer, I put something in our freezer, too; it's so long ago (four or five months) that I can't remember what it was — I forgot all about it for the October Q. Anyway, I've just rung Gwen and asked her to take it out to start thawing, and I'll report on it tomorrow before I finish this off.

After typing the previous paragraph I rang Gwen to ask her to fish it out so that it would start to thaw by the time I got home. It seemed quite happy, and was also this morning. Again it's a dud recorder, a Virdung style treble which John Cousen had abandoned because a superficial crack appeared and gave to me as a cosmetic instrument, one that I could show to represent a type. Like Donald's, it's still a dud recorder, but the crack is no worse than it was. So we can assume that thick-walled instruments are OK to freeze; what we need to try now is something thin-walled, to see if that survives and, of course, something with active woodworm to make sure that they don't survive. Further reports from any of you will be welcome.

Don has also sorted me out about the columns and the space between them, pointing out that it's the area that's halved, not the linear measurement, so that the half inch becomes about three-eighths. The two reviews herewith are wrong in that respect because I did them at home last night and I'd not corrected the column spacing on the review proforma on my home machine; it didn't seem worth redoing them here just for that. Since typing that, so has has Simon Lambert, and as his is typed I'll send it on to Eph to see whether he thinks it worth printing. Simon said print or summarise as I prefer, and as it's essentially the same as what Donald said, it's already summarised above.

FURTHER TO INSTRUMENT REVIEWS: Carl Willetts says "*What would be very useful in FoMRHI would be reviews of surviving originals, ie which specimens are rubbish and should not be copied; which is the best playing Bressan (Edgar Hunt's, or Chester, or ...) and deserves to be copied; for playing Handel should one copy a Bressan, a Stanesby, or a Rottenburgh; etc, etc*". Alan Davis who has played both our ex-Edgar Hunt Bressan and the Chesters (we hoped at one time that it might be possible to do a concert with both, but Chester clamped down on loans before we could put it into practice) can answer that in detail, and I hope that he will in the next Q.

So I hope will others of you. This seems a most excellent idea and I trust that enough of you with playing experience of the best instruments around the world will start providing information. This would tie in very well with the Hague Gemeente Museum's project of listing all the world's museum plans in one book. This should be nearly ready for production; I had a proof copy and sent it back over a month ago.

What Carl also said was that while he finds such reviews as those which started all this correspondence off "*both interesting and useful, my reservation is whether FoMRHIQ is the best place for them. Recently, for instance, Theo Wyatt has reviewed plastic recorders in* <u>*Recorder & Music Magazine*</u> *(Dec.89 and June 90 issues). They are factual and hard hitting, being very specific and critical on intonation. The point is that they appear in a magazine read by* <u>*buyers*</u> *of instruments who need to be guided in how to choose from a variety of makers in the shops.*"

ARTIFICIAL IVORY: A separate note from Carl that he saw in *New Scientist* for 1st September 1990 a note about a Japanese, Mitsuru Sakai, who is the director of the Sakai Research Laboratories and who "*claims that workers at the institute have developed an artificial ivory, almost indistinguishable from the real thing, using little more than eggshells, milk, and an additive, titanium dioxide. Sakai explains in a recent issue of* <u>*Science and Technology in Japan*</u>

that substitutes for ivory already exist, but none absorbs water to the same extent as the natural material. This is crucial, he says, for piano keys." The article goes on into some detail of how it's made, adding that it has capillaries which make it more absorbent than resins, etc and thus more suitable for mouthpieces as well as keys. It does not, however, give a specific reference to the initial publication, nor does it give Dr.Sakai's address. If anyone would like to follow it up, please do, and please let us know; I have written to one of our Japanese members to ask whether he can find anything out. If Dr.Sakai would like to produce any information for us, many of us would be very interested.

CATALOGUE AVAILABLE: David Owen has sent me the latest catalogue from Archival Aids Ltd, Unit 29, Trent Lane Industrial Estate, Castle Donington, Derby DE7 2NP; tel. 0332-850450; fax. 0332-811907. It lists a wide range of chemicals and solvents, mainly conservation materials, tools, and so forth. David says that they have recently replenished their stocks of Comet cold animal glue, which has a limited shelf life. They also stock pearl glue and a number of other adhesives.

COURSES: The Geneva Centre for Early Music has sent me their 1990-1991 list of courses; if you fancy a study weekend in Switzerland, write to them at 8 rue Charles-Bonnet, CH-1206 Genève.

The annual list of courses has just arrived from Huismuziek, the people who run our Dutch opposite number, Bouwerskontakt. They seem to be doing mostly one-day courses this year, except for a fortnight on fiddle making (which seems to cover violin and viols), 29 June to 13 July. There are also playing courses for pretty well everything you can think of, some one day, some three, and some longer. If you're interested (and Holland is always a nice place to spend a few days), write to the address under Bouwerskontakt in the List of Members and ask for a copy of the Kursusprogramma.

Bate Weekends: Hand Horn with Tony Halstead, February 16/17; Gamelan Dance Music March 2/3; Lute Continuo from Scratch with Lynda Sayce, May 11/12; Bow Rehairing with Andrew Bellis, June 22/23 (only five places left for that one; no limits on numbers for the others). Costs are the usual £20 (£15 students); cheques to the Bate Collection, <u>not</u> to FoMRHI.

There will also be a couple of Summer Schools here. A Gamelan one 14th-19th July, and a Bow-Making one 4th-9th August. Andrew Bellis is running the latter, so if interested, write to him at 4 Kennart Road, Poole, Dorset BH17 7AP. The Oxford Gamelan Society is running the former and if you're interested in that, write to them care of me. We can afford to run Weekends, but we came such a cropper last year that we can't risk the amount of money necessary for a summer school, so we will act as host to anyone suitable who'd like to run a summer school here and is willing to pay the Bate to do so. The Collection is of course available for this, subject to the appropriate safeguards. If anyone would like to run such a summer school, get in touch and we can discuss the possibilities.

EXHIBITION: Boston Early Music Festival & Exhibition is coming up (May 31 to June 9). It's already too late to register (I do wish these people would send their stuff out in time). If you want to be on their mailing list for next time, the address is POBox 2632, Cambridge, MA 02238. If you want to ask whether they still have any spaces left, the phone number is (617) 661-1812, but applications should have been in by November 1st. Even if they'd sent the information to me in time for the October Q it would have been too late by the time you'd received it; bad organisation somewhere.

Presumably we shall have a Horticultural Hall Exhibition in London this year; I'm surprised we've heard nothing from them yet. Perhaps there isn't one.

PERMUTED INDEX: Charles Stroom has sent me the new version. We will find out whether we can afford to produce it again this year; I hope we can, but numbers are dropping a bit, which affects what we can afford to publish, and I suspect that we are getting towards the end of a subscription rate; it's been what it is now for some years, and inflation and the post office have been eating away at it. Barbara says that we can probably afford it, but can we please wait till later in the year to make sure.

MUSEUM NEWS: The William Smith harpsichord that I told you about as a new arrival in the Bate in the last Bull. has now been restrung and sounds terrific. No proof yet that it was Handel's, but the evidence is rather stronger and more convincing that it may have been. We hope to have a drawing of it before long. It's a useful size, a small single manual with a full five octaves.

In case any of you could make use of a fairly basic leaflet, I might as well tell that our latest Bate Handbook is on *Tuning and Temperament, and why we have to do it.* Copies cost 50p plus a bottom-rate stamp (it's three pages reduced onto one), and it's by me well sorted-out (very kindly) by Lewis Jones.

EXHIBITION OF FLUTES: Just arrived in time, a fax from Peter Spohr saying that the German Flute Association is putting on an exhibition from 6 March to 7 April in the Frankfurt Historical Museum (Saalgaße 19), which will overlap with the International Musical Instrument Fair and coincide with the International Flute Festival (March 14-17). There will be about 100 "art music" flutes from Europe and North America, including Naust, Schell, A.Grenser, Crone, Castell, Tromlitz, Boehm, etc, and about 30 non-European and folk instruments, all transverse and all coming from private collections and thus not previously exhibited. There will be a trilingual catalogue (English/French/German) with every instrument illustrated. More information available from Peter at POBox 701011, D-6000 Frankfurt 70.

DEADLINE FOR NEXT Q: We'll say April 1st, but I'm hoping to be abroad till the end of that week, so you will have more margin than this time, and anyway the April Q takes me longer because of the new full List of Members. So you should be safe till the middle of the month, but DON'T COUNT ON IT. Try to get your changes of address, notes for the Bull, and above all your Comms here for All Fools Day (April 1st in case that isn't a custom in your country).

CODA: That's it. I'll hold this till tomorrow anyway (I did, and several new bits have arrived) in the hope that my whatever it was has thawed out (it has), and until the next batch of renewals comes through from Barbara, which will probably mean the next day, Jan.3rd (it did).

Jeremy Montagu
Hon.Sec.FoMRHI

BULLETIN SUPPLEMENT

A Comm on Chemical Analysis:

A few years ago Jeremy, Cary Karp and I agreed that Jeremy or I should reject Comms that encourage readers to do things that are directly contrary to the interests of good conservation practice, and that if we were not sure of this, we would send the Comm to Cary for vetting. I've not previously had to invoke this agreement and I don't know whether Jeremy has.

On the basis of this agreement I have decided to reject a Comm submitted for this Q. It details the setting up and use of a do-it-yourself reagent kit for the detection of the presence of silicates, metal salts and iodine compounds in small samples of wood from historical instruments to obtain evidence of how the wood was treated. My objections are;

1: There may be better methods than this one for making such an analysis that would be more comprehensive and quantitative, and be less destructive of the samples.

2: If the reader is an amateur chemist, no matter how good the instructions are, there is a much greater chance that something will go wrong and the samples are wasted than if an experienced professional chemist did it.

3: The professional analytical chemist would already know these or similar methods, so this Comm would be of no use to him. There is no claim in the Comm that the methods given are any different from or better than standard ones.

The soundboards with interest in the treatment methods for the wood are over a quarter millenium old. Few pieces of these with certain provenance survive which could be considered available for such studies. They are very valuable and should not be wasted, destroyed by tests that don't deliver any significant increase in our historical knowledge. Decisions about such tests should only be made after full discussion with as many people as possible who are highly knowledgeable about the history of wood treatments, the history of instrument making, the spectrum of analytical techniques available, the work of others on similar problems, and good conservation practice. If the tests are to be performed, they should be done by the best methods and the best practitioners available. This Comm encourages otherwise.

A Comm on Gut:

In the Bulletin Supplement of the last Q I summarised a Comm on weight-loaded gut strings that was not fit to be included. The author has since sent a new version of his paper which is better written, reproduced better, and has a bit more information on the materials he used. Though most of value in it was in my summary, I've decided to include it in this Q, especially since the latter is rather thin.

A Comm on Jacks:

The thinness of this Q also influenced another editorial decision. The Comm entitled "A Dynamical Harpsichord Action" has been included though its topic, which exclusively involves modern innovation, has nothing to do with increasing our understanding of historical instruments or reproducing them. I wouldn't consider that a harpsichord designed around this action would be an historical instrument. Yet this Comm is intelligent, open and honest, and it is possible that our keyboard people might find it interesting, and perhaps be of help to the author.

Ephraim Segerman

Review of: ***Keyboard Works of Carl Philipp Emanuel Bach*, Bernard Brauchli, clavichord, Titanic Records, POBox 204, Somerville, Mass 02144-0204. CD TI-186.**

Bernard uses two different clavichords in this recording. One is by Eckehart Merzdorf of Remchingen, made in 1978 after one by Manuel Carmo, built in Oporto in 1796. The other is by Clifford Boehmer of Belmont Massachusetts, where the recording was made, built in 1980 after a Chr. Gottlob Hubert of 1782. The two are quite different in sound and in character. The Merzdorf is much less stable in intonation as a result of dynamic change and with the use of *bebung*, there is a very definite, and to my ear somewhat upsetting, variation of pitch on fortes, and the use of the *bebung*, which was after all one of CPE's strong points, results in something very like the wow of a poor tape recorder. On the other hand, it has a very forward sound with considerable immediacy, almost too much so, especially in the first track on this record, the *Fantasia in F♯ minor*, Wq.67. It is also, I suspect, slightly the more difficult clavichord to control; there is a tendency for some notes to clunk, especially in rapid passages (the general tendency of clavichords to do this is why they were regarded as the ideal practice instruments; if your touch was good on a clavichord, it would be wonderful on any other keyboard instrument). In general, I would suspect that it had more flexible stringing and a less tactfully placed balance point for the keys. I don't, unfortunately, know enough of the history of the clavichord to know whether this is a characteristic of Portuguese instruments, in contrast with German, or not. Certainly the other, the Boehmer copy of the German Hubert, is much more stable in intonation. The *bebung* is used just as much, is just as musically effective, and yet is sufficiently narrow in pitch variation that it is never disturbing. It would be distinctly unkind to liken the Merzdorf to Maria Callas's (or Janet Baker's) vibrato, and the Boehmer to Joan Sutherland's, for the Merzdorf is never as bad as that, but the comparison will give you an idea of the difference. The Boehmer, too, is slightly less forward (I presume that the microphone placement was similar) but it has a more 'interesting' tone quality. What do I mean by 'interesting'? I don't quite know, but there seemed to be more there; presumably there are differences in the soundboard and bridge which affect the harmonic content.

The Boehmer is used for three Sonatas, Wq.50/4 in D minor (*With Varied Repeats*), 63/4 in B minor (from the *Versuch*), and 48/6 in A (*Prussian*). The Merzdorf is used for the *Fantasia*, for the *12 Variations on La Folia*, Wq.118/9, and for the *Farewell to my Silbermann Clavichord*. I do wonder how appropriate it was for this last; how like a Silbermann in character is it? I have never played a Silbermann, but it's certainly nothing like the Hieronymus Hass in the Bate. Maybe that's the point, though: the Silbermann has gone, and only a different one left.

The playing is excellent throughout, especially in the Sonatas. I had a distinct, but probably subjective, impression that Bernard was happier on the Boehmer which, considering his major expertise in Iberian music, is probably wrong. I have to confess to having been less than an enthusiast for CPE; his orchestral music, which I know better than his keyboard music, has always struck me as somewhat ponderous, especially when he is trying to be humorous. However, music and performance of this quality is certainly enough to convert me, despite a few rhythmic instabilities.

Some Titanic recordings are also available on cassette, but not this one, nor the other reviewed here.

Review of: ***Eighteenth-Century Music for Two Keyboard Instruments*, Bernard Brauchli & Esteban Elizondo**, Titanic Records, CD TI-185.

The instruments used here are a harpsichord by Jeremy Adams of Danvers Mass, made in 1986 after a Nicholas and François Blanchet of 1730, played by Bernard Brauchli, a positive organ by Gabriel Blancafort of Coll-batò, Spain in 1978 on an unspecified model, played by Esteban Elizondo, and the same two clavichords as were used in the CPE Bach record, with Bernard on the Boehmer and Elizondo on the Merzdorf.

The harpsichord seemed unexceptional; a good French copy. The organ I was less happy with. Some of its notes shriek out, way out of context, especially in the first work, a *Concerto in A minor for two harpsichords* by Johann Ludwig Krebs (in his very informative sleeve notes, Bernard emphasises the contemporary practice of playing such works on any two keyboards convenient and to hand). Fortunately, this particular stop doesn't seem to have been drawn again, but it seems odd that a modern instrument should be so badly voiced and that this could not have been corrected for a recording. The recording was made in the home of Professor and Mrs Harry Gatos, and presumably it was their organ, and they may have been unwilling to have had it messed around. The different characteristics of the two clavichords are described in the accompanying review of the CPE Bach disc.

Krebs, who was apparently J S Bach's favourite pupil, strikes me, in this work anyway, as something of a crab. The two instruments spend most of their time working in parallel. The second work, Christoph Schaffrath's *Duetto I in C*, is much more musically interesting, with the two instruments mostly contrasting and responding with and to each other. There are two *Concertos* by Josef Blanco of Cuenca, both in G and both probably originally for two organs, the second played first on organ and harpsichord, the first played later on the two clavichords. The two *Verso de oitavo tono* for two organs by Francisco Olivares, also of Cuenca, are treated similarly. A curiosity is J C Bach's *Sonata in C* for two organs, which was found in Braga and which is an elaboration of his Op.15, no.6 *Duett for Due Cembali obbligati for two performers on one pianoforte or harpsichord*. It is the first piece played on the two clavichords, and the acoustic strikes one as remarkably stuffy. If it was recorded in the same room as the organ and harpsichord, the close-placing of the microphones has led to a much less sympathetic ambience than for the two former instruments. As a result, the acoustic has none of the clarity or sparkle that was apparent in the CPE Bach recording, and the first movement of the JCB seems rather heavy-handed, more, I think, because of the acoustic than of the playing. The second movement (there are only two) comes off better, perhaps because one is becoming more accustomed to this sound.

So far as the music is concerned, Blanco seems to be the winner; his are much the most interesting pieces on the disc, followed by the second, clavichord, Olivares and the Schaffrath. The main interest of the record, I think, is in the use of the two instruments in these ways.

FoMRHI Comm. 1014 Arnold Meyers

UNIVERSITY OF EDINBURGH
COLLECTION OF HISTORIC MUSICAL INSTRUMENTS

Progress Report 1990

In the year, the Collection has been given instruments by John Busbridge, Frank Dodman, Edith Dundas and Raymond Parks.

An 18th century silver-mounted ivory cornemuse by P. Gaillard with its silk cover has been purchased with assistance from the National Fund for Acquisitions and the Pilgrim Trust.

The Collection has published the first volume of the new Catalogue of the Collection. This prestigious volume contains nearly 400 full view photographs, close-up photographs and radiographs of a representative cross-section of the Collection. The photography is the work of Antonia Reeve, and was undertaken in 23 sessions in the period 1985-1989. The volume also includes an introduction to the fascicles of descriptive text which will follow. The Catalogue has been supported by the Radcliffe Trust.

The exhibition organised last year in conjunction with Bradford Art Galleries and Museums with the support of the Museums and Galleries Commission, Brass Roots: 150 years of Brass Bands, has finally been shown this year in Salford, London and Manchester.

The Honorary Curator represented the University at the CIMCIM (The ICOM Committee on Musical Instrument Museums) meeting in St Paul, Minnesota and Vermillion, South Dakota. He is a member of the Documentation Working Group of CIMCIM.

Plans for re-housing the Collection have progressed: building work is virtually completed on on new premises immediately to the north of St Cecilia's Hall in Niddry Street. A Museum Designer has been appointed to plan the fitting out of the premises as a museum and prepare presentation material for fundraising. His work has been awarded grant-aid from the Scottish Museums Council.

The Committee overseeing the Collection has adopted a Collections Management Policy in preparation for the Museum Registration Scheme which gives a detailed codification of the acquisitions policy.

The guitar by Josef Pagés (282) was lent for the Exposición de Guitarras Antiguas Españolas held in Alicante from April to June. The treble recorder (259) by Arnold Dolmetsch was lent for the Exhibition 'The Dolmetsch Years' held in London in May.

The Collection has been used for teaching purposes by University Staff, in particular for courses in the Faculty of Music on the History of Instruments, Ethnomusicology and Musical Acoustics. Several parties have made organised visits, and various scholars and instrument makers have visited to study particular instruments.

The Other Germany - Well Worth Visiting

I received the latest Fomrhi on returning to London from Germany where, after a visit to the Mollenhauer factory at Fulda, I managed to fit in a short trip to Leipzig & Dresden in the former DDR. Following Jeremy Montagu's references to the various countries in "eastern" Europe re Fomrhi & early music, I thought it might be of interest to record some of my impressions and to urge people to visit this recently much more accessible part of Europe which is the home of much of the cultural wealth of Germany.

A train from Frankfurt to Dresden via Fulda makes its first stop in the former DDR at Eisenach, birthplace of J.S.Bach. There is a "Bachhaus" museum in the town. Along the line from there to Leipzig are the towns of Erfurt, Gotha, Jena & Weimar, all having associations with Bach or other luminaries of the German musical and literary heritage.

In Leipzig itself, the Thomaskirche and the Nikolaikirche, where most of J.S.Bach's cantatas & sacred works were performed, are well maintained and always open to the public. The Nikolaikirche is smaller and less well known but is much the more beautiful of the two. Opposite the Thomaskirche, under the altar of which Bach has finally been laid to rest, is another Bach museum containing many manuscripts & musical instruments. Part of the University complex houses the Musical Instrument Museum. This very large collection may be familiar to some readers from Heide's highly detailed catalogues. It contains a great number of keyboard instruments very "openly" displayed as well as woodwind, brass & stringed instruments in cases. Chamber music is often performed in a small auditorium in the museum. I went to this museum on a Saturday afternoon when no "senior" staff was available but the person on the door told me that measuring visits should be possible by written application. About 20 miles from Leipzig is Halle, birthplace of Handel. I didn't have time to go there but the "Handelmuseum" in the town apparently houses many musical instruments.

Dresden, capital of Saxony, was an opulent musical & cultural centre from the 16th century onwards and is especially associated with Heinrich Schütz, Weber, Wagner & R.Strauss. Since the visit of the R.A.F. in 1945, many of the beautiful baroque buildings and the 19th century opera house have been completely restored but others not (e.g. the royal palace). Work seems to have resumed with great vigour recently, however. Listening to a local "serious" music radio station, I noticed a strong "regional nationalism" in the choice of material, with any reference to Dresden or Saxony being emphasised whenever possible - there is, of course, no difficulty in producing programmes with this theme in mind! A prominent local group, the Dresden Baroque Soloists, use modern instruments but I expect period instruments will become more widely used in the future.

This area, essentially Saxony, Saxon-Anhalt & Thuringia, was also the heartland of the Reformation and Martin Luther - Wittenberg, Wartburg, Eisleben, etc. - and there is a wealth of Gothic & Baroque architecture in the region. I'm sure there must be other collections of musical instruments and manuscripts not well known outside the country throughout the areas I visited and the less densely populated region north of Berlin & Magdeburg.

I would recommend anybody with time when in Germany to visit the former DDR region. At present, many prices are being maintained at the old levels, e.g. rail travel costs half as much per kilometre as in west Germany, tram & bus fares are absurdly low and overnight accommodation (other than "international" hotels) is very cheap. How long this will last, I don't know, so take advantage of it while you can!

.....

FoMRHI Comm 1016

Hard Currency & Eastern Europe

On the subject of exporting hard currency from the former socialist states of Europe and whether or not we should assist Fomrhi members with subscriptions, it should be noted that, although it is now easier to export currency from some countries, the people who live there need hard currency probably more than before just to get by. The "black market" in these countries has changed only in detail, not character. It was very apparent in Dresden, with its proximity to the Czech & Polish borders, that many people were coming to Germany to sell goods - liquor, knitwear, glassware, etc. - to get hard currency to take back home. Although I'm sure some of these are highly organised speculators, I saw and spoke with several rather pathetic characters with only a few wares who are just trying to survive. Therefore, I think we should continue to be generous to Fomrhi members in central and eastern Europe and to anyone else we know over there.

.....

FoMRHI Comm 1017

Reducing & Enlarging Paper Sizes

In Bull.61 (p.4 re Comm. 978ff), Jeremy Montagu asks why a half inch gap, when reduced to half size on a photocopier, becomes $\frac{1}{8}''$ and not $\frac{1}{4}''$. If I am right in assuming that he means that the page size is reduced to "half size", (e.g. A4 to A5 as per Fomrhi), it is the AREA of the page which is reduced by half and not the linear dimensions, or lengths of the sides, which produce this area.

The area of a rectangle is the product of its two side lengths, i.e. it is a quadratic function.

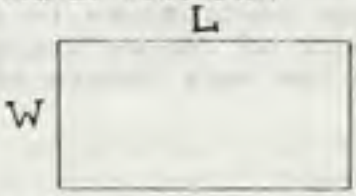

AREA = L x W

If, as in the case of photocopier reduction, the ratio of the sides L : W is to be maintained, for a given area reduction, the lengths of both sides will have to be reduced by the square root of the area reduction.

e.g. reducing A4 to A5 :-

Area reduced by 0.5 (50%)

Linear dimensions reduced by $\sqrt{0.5}$ = 0.71 (71%)

Similarly, enlarging from A5 to A4 :-

Area increased by 2.0 (200%)

Linear dimensions increased by $\sqrt{2.0}$ = 1.41 (141%)

If you measure the sides of any adjacent "A" sizes of paper, e.g. A4/A5, A3/A4, etc., you will find that these relationships hold.

In the example which Jeremy gives - a $\frac{1}{2}''$ gap on A4 is being reduced to A5:-

$\frac{1}{2}'' = 0.5''$

$0.5 \times 0.71 = 0.355''$ (new gap size)

$\frac{1}{8}'' = 0.375'' \simeq 0.355''$ (near enough!)

To reduce a $\frac{1}{2}''$ gap to $\frac{1}{4}''$, it follows that a 4 times area reduction would be required, i.e. A4 to A6.

.....

FoMRHI Comm. 1018 Lewis Jones

On the Reviewing and Modification of Musical Instruments

In Comm. 981 Ardal Powell asks several interesting questions about the desirability and difficulties of reviewing musical instruments. Unfortunately he doesn't separate these from general and personal criticisms relating to the two reviews which prompted his thoughts (Comms. 966 and 967) and produces, in his own words,"a web of arduous moral and practical difficulties". This is all the more tightly entangled since his reading of the reviews themselves seems to have been a careless one.

In the first paragraph of his review Jeremy explained that Mr. Toyama, the manufacturer of the flute and recorders, had invited "suggestions and advice". Ardal resolutely overlooks this. In Comm. 982 Jeremy relates the history of the reviews and outlines the accepted conventions in respect of receiving and disposing of review materials. He strongly defends the principle of peer review, and I am grateful to him for his support of my competence, and Alan Davis's, in the face of Ardal's questioning, apparently, whether anyone is fit to comment upon instruments to inform others. (I loose my grasp of the logic of Jeremy's argument, though, when he calls into question the very future of FoMRHI).

This should have been enough.

I hadn't meant to comment further myself, hoping that the matter would rest, but we now find Ardal (Comm.1003, paragraph 3) insisting, in the light of all that has been written, that "the [flute] worked on as described in Comm. 967 was not the reviewer's property -- making any alteration of it for any purpose highly questionable". Let me explain again:

The History:

The instruments reviewed represent, in one way or another, new departures in design or manufacture, and they will have some impact in the marketplace. As such they should be of interest to FoMRHI members who, since they do not themselves (to the best of my knowledge) make moulded plastic instruments, need not have their noses put out of joint at only one manufacturer receiving attention. I would have been happy to write a simple notice describing the instruments, but that is not what was requested.

Towards the end of June I was asked if I could report on a new Aulos Stanesby flute within a week or so; time was short before the next deadline. If I thought that changes

to the instrument were called for I was encouraged to try them out and to report on them. The manufacturers had invited such suggestions. Jeremy was himself writing a general review (I didn't know what he would say) comparing the flute with his own Stanesby, and it was understood that I would be welcome to keep the instrument, then an unknown quantity.

I tried to give the instrument a fair airing. As I said in the review, I was impressed with it, and I played it as much as I could in the time available; if it had been obviously defective I may not have felt bound to do this. I played it solo and with a harpsichord, and assessed its tuning with a meter and against electronic drones. Other people heard it and liked it, sometimes to their surprise, but the opinions in the review are my own. After several days I made the subtle changes I described to the fingerholes, leaving writing the review as late as possible.

Mr. Toyama gave the instrument freely, asking for advice. That he sent nine instruments was unusually generous, but presumably he was happy that he could afford to do so. Having accepted the flute for review I am free to treat it as I think appropriate, up to and including testing to destruction (hardly necessary). I confirmed this with Jeremy.

I understand that Mr. Toyama has been sent copies of the reviews, and I hope he is pleased with them.

The Future of Instrument Reviews in FoMRHI

I don't think the "formal institution of instrument reviews" (Comm. 1002) in FoMRHI has been proposed. Like Ardal, I doubt whether much good would come of members reviewing one another's instruments as a matter of course, but if individuals happened to submit instruments for scrutiny, by loan or gift, I can see no reason for them to be disappointed. I don't feel the Aulos reviews were "grossly unfair to some individual members" (ibid.; did any members?), and I can't see why any future reviews need be so. Occasional commentaries on particular instruments could tackle technical and musically significant details, of the kind which appear all too rarely in FoMRHI these days.

The Web of Arduous Moral and Practical Difficulties

Whatever Ardal thought of my own contribution, he hardly garners support for his cause by dismissing as 'absurd' a perfectly valid description of three instruments by one of the world's most respected and widely knowledgeable instrument historians, particularly as Jeremy defined the terms of his review at the outset.

Several questions along the lines of some of Ardal's passed through my mind as I wrote Comm. 967, but none led me to think I was being "hasty and imprudent" (Comm 981). Perhaps we should reconsider his:

In para. 3 of Comm. 981 Ardal asks how "copies" might be assessed. As no old instruments reach us precisely as they were when new, all modern 'historical' instruments, whether they be copies or to some degree reconstructions, are interpretations of historical evidence, very much as our performances of old music are. There are no absolute criteria for this. We all make our own interpretative construct or, when it suits us, appropriate someone else's, as has happened to a remarkable degree in, for example, the evolution of current 'baroque' orchestral style. So a reviewer will need to ascertain, or make a sympathetic judgement of, the maker's aims. Once this is done, one or more commentators could describe an instrument and assess its fitness for a given role. We need not expect that they will agree in all particulars of aesthetics, and of Ardal's "functionality", any more than we expect an identical response from two critics attending the same concert. I am more hopeful that there are willing people with expertise and no axe to grind than Ardal seems to be in para. 4.

Ardal is concerned that the definition of the "very specific job" an instrument has to perform "will vary from one individual musician to the next". Admittedly, there may be problems with the job to be performed by, for example, a reconstruction of a Saxon lyre; but with a copy of an 18th-century English flute the job is, presumably, (at least) to play 18th-century English flute music. Minimum requirements for this are widely understood, and could be defined, almost as the requirements of a flute for playing the Boulez Sonatine can be defined. We are concerned here with the necessities for the job -- at the very least with the avoidance of defects. There are also, of course, desirable beauties to be sought in an instrument, in which taste will vary more, and these too could be taken into account.

Ardal asks about the reviewer's concept of "the original". It is reasonable for a maker offering for sale an instrument based upon an historical example (or a conflation) to expect to be asked how the new design derives from the model(s), though I haven't always found them very forthcoming. Any report on a copy would have to take this into account, and failing a statement from the maker, reviewers might make their own investigations.

In approaching the Aulos flute I treated it first and foremost as an instrument in its own right (one plainly intended primarily for mid 18th-century music), and only secondly, since it makes no pretence of being a facsimile, as a Stanesby "copy". However, I drew on occasional

experience of playing and examining Stanesby flutes over the last fifteen years, including some systematic study, upon a corpus of measurements and pitch records, my own and others', and upon wider experience of contemporary English and continental makers' work. Direct comparison was impossible in the time available, but we have since tried it with Jeremy's shortened Stanesby (including exchanging head joints) and with ivory instruments by Schuchart and Cahusac. I also made use of a tuning meter (though not "set" to a particular tuning system, as Ardal suggests, which might be prejudicial), following the same procedures I have used for the last decade in attempting to document woodwind tuning schemes. Though there is much about a player's relationship with an instrument that is almost inexpressible, Ardal seems to underestimate the extent to which aspects of instruments' performance can be compared objectively and quantified. If I play an instrument consistently over a period of a week, I consider that "temporary mood" can be discounted, whatever the significance of personal taste.

Ardal's paragraph 6 addresses the question of price. To return to the Aulos, I was happy not to know the price when I reviewed it; it removed a possible cloud of prejudice from my assessment of its musical qualities, and forced me to consider what price might be appropriate in relation to other instruments (Comm. 967, p.16). Like Jeremy and Michael Ransley I was disappointed to learn that the price is as high as it is, but that doesn't in any way alter my opinion of the flute. In this country the price has been set as high as the market will possibly bear, and an opportunity to popularise the instrument will have been missed.

I can see no reason for instruments "to be compared only with others like them in price". If I were invited to attempt a comparison of, say, several mass-produced flutes (not something I recommend for FoMRHI), I would like to play them and report on their musical and other qualities before learning of their prices, perhaps even of their makers' names, as in a wine tasting. Prices might then be listed as an appendix, and readers left to form their own opinion.

What sort of authority can Ardal be envisaging when he asks "May cheap copies only be made after undistinguished originals, or can expensive copies of them be allowable too?"? Why should anyone copy an undistinguished instrument, for sale at any price, when there are alternatives, and who in their right mind would want to make expensive copies of similarly poor models?

I simply don't understand paragraph 7. Having initially damned both reviews with faint praise ("much of what they said seemed sensible..."), Ardal now states flatly that "neither review provided any [information]". He asks

whether offering Mr. Toyama this (apparently nonexistent) information is in the interests of professional consultants in the field, of FoMRHI members, and last but not least of Mr. Toyama himself. There is a clear difference between the professional contractual arrangement between manufacturer and musician/designer (involved in the initial development of an instrument) and the relationship between the same manufacturer and a reviewer. I am surprised that Ardal muddles them. Nothing about the writing of a review of an existing instrument compromises the professional standing of the design consultants; though, put bluntly, if Mr. Toyama can get the information he needs for nothing, why should he pay for it? I don't understand how my offering Mr. Toyama a few suggestions could be against his interests, or those of FoMRHI members (who can judge for themselves).

I think Ardal's remaining points are exhaustively dealt with by Jeremy, and in the magnificently sane and constructive contributions of Roy Chiverton, Paul Hailperin, Simon Lambert and Uta Henning.

Record Reviews

In Comm. 982 Jeremy asks whether records should be reviewed in FoMRHI. I should like to suggest that they should, but not with the same emphasis as in other musical periodicals. Recordings can be a valuable source of information about the sound of historical instruments, especially of those like little-altered organs which are our most dependable touchstones of historical sonority. To treat recordings primarily as documents of instrumental sound would seem entirely appropriate to FoMRHI, especially if the reviews were written by contributors able to shed light upon the condition of the instrument(s) played. Useful information on historical instruments accompanies too few recordings, and it would sometimes be possible to provide a brief bibliography. Grant O'Brien's note on the disposition and history of the 1646 Brussels Couchet (C. Hogwood playing L. Couperin on Decca, DSDL 712) springs to mind as a model of informative concision.

This is not to say that the performance should not be mentioned -- it will, after all, colour the way in which we hear the instrument(s) -- but that it should not be the central aspect of a review, nor the prime criterion for accepting a record for review. Solo recordings would have more obvious value as documents of this kind, and ensemble recordings need only be accepted on their merits. The sorts of recordings I would most like to see considered are:

1) Solo recordings on all sorts of historical instruments;
2) Restored mechanical instruments;
3) Ensemble performances with rarely heard instruments (eg. chalumeaux, early mandolins, Baryton trios, the arpeggione sonata on the arpeggione, etc.);

4) Innovative attempts to reconstruct lost instruments (eg. classical and medieval instruments, the geigenwerk, lautenwerk, and early viols; I suggest, for example, that 16th-century recercari on a newly reconstructed set of 16th-century viols should be reviewed, while the same music on an assortment of 18th-century or neo-baroque viols should not);
5) Important recordings of non-European instrumental traditions, perhaps especially when they might illuminate historical European practices;
6) Possibly occasional orchestral or concerto recordings (where the composition of the orchestra or the choice of the solo instrument has a particular importance), but bear in mind that the more complex the ensemble, the more heavily the resulting sound relies upon the performance and the conditions of recording.

Addendum to the Review of the Aulos Flute

My usual 415 flute having been damaged, I recently used the Aulos Stanesby in a programme which took it to perhaps its chronological limit of suitability; the J.C. Bach concerto (1768) and Haydn's 6th Symphony (1761). It served ramarkably well (the tuning being wholly comfortable except above d''', and the tone strong enough for orchestral use) and prompted favourable comments (and some teasing) from other players. It has the great advantage that one can practise to exhaustion, or survive long ensemble rehearsals, without fear of endangering the instrument by wetting it.

In Comm. 967 I remarked favourably on the the key and on the novel design of its spring. It looked sound, and presumably has been tested, but the spring of the review instrument has since failed, and I suspect this may become a problem with others of these instruments. In passing around the axle the spring is bent tightly through some 270 degrees of a circle and is then folded sharply back through about 90 degrees. In practising on the afternoon of the concert, after perhaps twenty hours use, I found that the key became unreliable, and within another five minutes it ceased to close. When I removed the axle I found that the spring had fatigued irreparably at the fold, and the two leaves parted completely with only a light touch. I used a rubber band!

I mentioned also two slight steps running the length of the instrument, and a ridge in the moth hole. In fairness to the makers I should say, having now seen them, that neither of the other two flutes sent for review has the latter, more serious defect.

Since it is New Year's Eve, I wish Ardal, Jeremy, Mr. Toyama and all a very Happy New Year.

FoMRHI Comm: 1019 Alec V Loretto

In Comm 985 David Way discusses the changes that occur in the sounds produced by musical instruments, with the passing of time and with playing. He notes that some wooden recorders he owns have changed for the better and wonders whether this might be due to the bore changing shape. He invites my comments. Certainly changes in bore shapes must have some influence upon the sound, however slight. However, in my experience deformations of the bore affect more the intonation of the instrument. The long middle section of the three piece wooden recorder, with its thin walls, is most affected. In addition, both ends of this middle section are subject to the pressures imposed by the cork or string windings where they fit snugly (but not too tightly!) into the sockets. Changes at these two points can have quite a marked influence upon intonation. To illustrate this, play the octaves 012 and Ø12 as well as 0123 and Ø123. Now insert a piece of modelling clay, plasticine, or chewing gum into the bore near or north of the thumbhole. Play the same octaves. Make the inserted material bigger. And even bigger. Inserting material makes the octaves too narrow. Removing the material restores the original tuning. Going even further and removing wood will widen the octaves. An experienced maker, suitably knowledgeable about what parts of the bore affect what octaves, can often tune an instrument more to the liking of the player, by inserting material into the bore, or by carefully removing wood - that is making the bore smaller in places, or bigger. Which in effect, is what happens when recorder bores change shape, for whatever reasons. But all of this leaves unanswered David's query as to exactly why recorders change their sound. I can give no definite reasons. But I suspect that there are many reasons, all different, but related. With harpsichords, David urges makers to 'get enough things right'. I'm sure the same is true for recorders. And if one does just that, and the instrument is well cared for, the chances of it improving are considerable. I suspect that new recorders, like new harpsichords, have to learn to vibrate, have to learn to sing, and have to learn to respond, just as much as the player has to learn to understand and exploit the special qualities of the new musical instrument. Whatever it might be.

FoMRHI Comm. 1020 Rémy GUG

An imaginative investigator without... investigations !

I announced in my Comm. 976 that the geometry of early instruments will continue to trigger off different kinds of reactions in the future. In the last FQ [Comm. 1008] Mark M. Smith gives us an example of his tenacity. A persistent nature is an appreciable quality in historiography, given the researcher is willing to widen his scope and to try different other possible ways not limiting himself to collecting only data that confirm his "impression" or "idea"...!

Despite my long explanations, Mark did not grasp the difference between "analysis" and "tracing method". It is clear that an analysis built up solely on decimal numbers and a pocket computer could not support the "apparent" discrepancy of "about"9mm given in the first paragraph of his comments. I agree that in this case an analysis would be "in error". As I did not provide an analysis juggling with decimal numbers, the error - if there is one - would be elsewhere. In the tracing method ? As nobody in our modern civilisation still pratises the ruler and compass method following the great tradition of the Renaissance, I shall never know if a discrepancy of say 1.4 % would have been tolerated in an early workshop. This "apparent error" - Mark seems not very sure on this point - would become clearly visible with the aid of numbers, of course. But in our case, it would roughly correspond to the thickness of the lines when ink is used or to the small inaccuracy (when expressed in numerical magnitudes) always existing when double pointed compasses are used on a wooden tracing board. Yet it would surely be without effect on the final shape.

Here we touch the tricky question of the historical notion of precision, a matter which is of high interest not only to us, as instrument makers, but to many other scholars dealing with passed events (s. the works mentioned below). Recent interdisciplinary research shows that the notion of precision did follow the same ways as the historical units of measurement : both had been adapted to each typical situation of daily life, the need creating the unit and the accuracy. This sounds very strange to us, since we have a conventionnal universal system expressed in units totally independant of a given daily situation. The human, hence sociological component is absent in modern metrology. These habits make it difficult for us to admit that the early notion of precision must be defined "negatively" (in our way of thinking):

"precision" was, in early daily practice, the **maximum inaccuracy** allowed before fraud or other significant inconveniences were noticed in a given situation.

What can we reach with this definition in the field of early instruments ? What was the "margin" allowed in that case ? One of the most important factors playing a huge role when deciding in this respect was the "tradition" each master was steeped in. He knew "from experience" the exact degree between that was "too much" and that was "not enough". As those threads of traditions are broken in our case, it will be difficult to us to get a precise idea of the historical... "imprecision".

I return to the results I obtained on the viol. It is obvious that the shape printed on the page of Kevin's book can be fully traced using solely the early simple arithmetic and the historical geometrical virtuosity, as I did it. I emphasized in my Comm. that the results obtained there correspond to the historical reality only if the shape on the paper corresponds exactly to that of the original. This is an important point indeed.

But the prime aim of my researches was not to prove that Giovanni actually did as I do, but rather to show how a true historiographical method can lead to results that look different from that obtained when employing inadequate methods, i.e. ways of thinking and practical know-how totally alien to the civilisation which did produce the artefacts we like to study and... copy !

Results only based on very precise numbers are not automatically the best way of discovering passed realities, when these latter were built up using other methods. Modern reckoning can obviously be of great help during historiographical researches. But despite Mark's efforts they cannot replace non numerical investigations, first of all the questioning of early sources. Once more, the total or partial reconstruction of the past is not possible without a huge corpus of interdisciplinary knowledge about historical facts.

May Mark's collection of numerical data (the muliple-inch construction of course, not the analysis on p. 49 of the J. C. Hoffman violoncello-Piccolo) be regarded as mathematical epiphenomenon ? May they really encompass the one or the other scrap of the ancient reality ? Nevertheless, what has to be reached in this case is a complete practical method bringing us from the beginning to the end. We must remember that we are dealing with the works of humans prone to holistic thinking in all areas of their civilisation. What can (or could) then a craftsman attain with disparate multiple-inch scraps ?

It is sure that a method was used. To find it again, the working principles of that time are required; among this latter, metrology plays an important role.

For decades studying historical metrology only consisted in finding out the correspondence between early measures and our modern metrical system. The firm belief that our metrical system is far better than all that existed over centuries is one reason why we too quickly considered early practice as totally chaotic. Fortunately several scholars recently did a lot of good work showing that the early metrological realm was not a chaos but had underlying principles. As a result of these works we begin to understand the early metrological facts better using their proper logic. Specifically, I warmly recommend whomever is or will be dealing with early craftsmanship to study at least one of following basic works in this respect:

First, the Polish author:

KULA, Witold, "Miary i ludzie", Panstwowe Wydawnictwo Naukowe, 1970. French version: "Les mesures et les hommes", Paris, Ed. de la Maison des sciences de l'homme, 1984, 304 pages and a very "interdisciplinary" bibliography (p.277-302).

WITTHÖFT, H. et alia, "Die historische Metrologie in den Wissenschaften", Scripta Mercatura Verlag, 1986.

See also the very good work done by a French team of scholars:

GARNIER, Bernard, HOCQUET, J. Cl. & WORONOFF, D., "Introduction à la métrologie historique", Economica, Paris, 1989, 376 pages.

Other important works are indicated in the bibliographies found there.

These works give us a very precious (and "new") insight into many sides of this important facet of early civilisation. A great effort is required from our modern brains to be able to fully understand the ways of thinking and the deeds of early men. In other words, the reasons for our difficulties in grasping what happened in early brains, can only be found in... our own brains !

In the case we are dealing with here, let me say that only when the history, the function, the social, commercial or technical significations of "measures and measuring in early times" are clear to whoever is dealing with metrology in early intruments making, then some of the questions printed in the third paragraph of Comm. 1008 will become superfluous. For example, it is impossible that an early maker was allowed to create his own foot. Only the authorities could fulfill this step, and that not without good reasons, as lots of examples show in the works mentioned above. (The early creative artist-craftsman could on contrary freely create his module - "freely" in relation to his royal, religious, princely or other governmental authority, but not totally "freely" as regards some technical aspects of his problem).

Once more, don't waste time imagining solutions ! Historiography is firstly a matter of knowledge about what early people thought of doing and actually did and not the fruits of our own imagination. Let me add in this respect a fourth work the reading of which I recommend as warmly as before:

KRAGH, Helge, "An Introduction to the historiography of science", Cambridge University Press, 1987, 235 pages.

FoMRHI Comm. 1021

New Hypothesis on the Construction of Bass Strings for Lutes and other Gut-Strung Instruments

(by Mimmo Peruffo)

The Problem

After the death of the Florentine luthier Riccardo Branè, in the spring of 1983 I accepted to carry on the research concerning the making of bass strings for the lute. This project took its origin from the following observations:

1) Modern bass strings of the lute (that is from the 6th course on) are made of metal overspun on silk. Such a method is however only mentioned starting 1668. (1) Original iconographies and treatises that have come to us amply document that, before that period, these strings were made of only gut. But it has been proved that simplè-gut basses mounted on lutes do not produce sufficient sound. And when subject to a suitable tension (that is more than 2 Kg) they will reach larger diameters than those compared to the many measurements made on bridge holes extant of historical lutes (also taking into consideration some other very important information such as possible modifications made on the instrument, or whether the instrument is provided with extended neck or not).
On Harton's lute, which is kept at the Medieval City Museum of Bologna (Italy) with a ten courses, the 10th course bridge hole was measured, and found to have a diameter of only 1.3 mm. One of the main reasons why bass strings do not sound is that their flexibility rapidly decreases with larger diameters, as the string grows rigid (2). The basses of lutes represented in the late 16th to mid-18th century iconography, seem to have a smaller diameter and are often tinted or dyed (see the portrait of the court lute-player Mouton, by F.De Troy (1679-1752) at Louvre, and the emblematic paintings by E.Baschenis). Dyed strings are also mentioned by J.Dowland (3) and especially by T.Mace (4) who wrote that the basses he reckoned the best were those which came from Pistoia (Italy) and which were dyed in "deep dark red colour". It was then understood that, beyond any esthetical and commercial factor (valid for the higher strings) the colour of the basses could be due to a technological proceeding introduced towards the end of 16th century and used for gut, probably with a view to increase the material density artificially, and create sonorous strings with smaller diameter (and consequent greater flexibility). We still lack documents that could

provide us with information about this problem: Mersenne (1636) (5) and Griselini (nearly 1770) revealed that construction skills were very jealously guarded secrets (7). A sample of silk strings patented by the Science Academy of Paris towards the end of eighteenth century and miraculously preserved can however be considered as indirect evidence (8). These strings are partly overspun with metal and painted in red and blue. The red paint contains large amounts of mercury.
It is hard to understand the reason why the inventor used such toxic mercury salts, being that many red dyes were available at the time. These toxic dyes, though, have instead a high density.

METHOD EMPLOYED FOR THIS RESEARCH

For this research,we used a 10-course lute sufficiently typical of the first half of 17th century, for example, with a G tuning (and A pitch around 440 HZ), the vibrating length between 580 - 640 mm., the tensions around 2.0 - 3.o Kg., (basses included). If we consider a 10-course instrument, with a 630 mm. vibrating length, a modern G first string and tensions of 3 Kg. per string, we can calculate that the 10th course, if made of only gut, would have a diameter of no less than 2.1 mm.
The following mathematic relations have been employed:

$$Q = \frac{T \times 10.000}{4L^2 \times F^2 \times d} \qquad (9)$$

$$\text{diameter (in mm)} = 2\sqrt{\frac{Q}{\pi}}$$

which, condensed in one relation, will give the following:

$$\text{diameter (in mm)} = \sqrt{\frac{40.000 \times T}{4L^2 \times F^2 \times d \times \pi}}$$

where Q = section in mm2
T = tension in Kg
L = length of string (metres)
F = frequency (Hz)
d = density of material (nearly 1,3 gut)

If we fix the same conditions for all parameters and vary the material's density it will be possible to make a diagram

representing the 10th course's diametre change. The reduced relation will be as follows:

$$\text{diameter (mm)} = \sqrt{\frac{5,626}{\text{density}}}$$

We can assume from diagram No 1 that, if we double the density of the string's material, the 10th course will be reduced from 2.1 mm to some 1.45 mm.

But how will other physical variables such as vibrating length, A pitch standard and tension, affect the string's diameter? Shall it be sufficient to vary the vibrating lengths to obtain remarkable changes in the bass string's diameter? And what about the historical pitches?
We have verified how each parameter will affect the string's diameter, while the other variables have been fixed:

A) <u>Changes in diameter as a result of tension T on the string</u>. Once the following parameters have been fixed:

Vibrating Length = 0.630 metres
Gut's density = 1,3
Frequency (C) = 65,4 Hz (A=440 Hz)

The reduced relation will be as follows:

$$\text{diameter (mm)} = \sqrt{T \times 1,442}$$

T being calculated in Kgs. It is interesting to observe in diagram No2 that a variation of 500 grs. produces a change of only 0,2 mm in the string's diameter.

B) <u>Changes in diameter as a result of string's length</u>. Once the parameters: F = 65,4 Hz
T = 3,0 Kgs

have been fixed,

$$\text{the diameter(mm) will be} = \frac{1311}{\text{Vibr.length}}$$

If we note the above relationship in diagram No3 it can be seen that the change in the vibrating length, from 630 to 660 mm., only causes the diameter to decrease from 2.1 to 1.98 mm.

C) <u>Changes in diameter as a result of pitch.</u>

We know that today's 440 Hz A comes from recent international agreements.
In times past it was subjected to variations depending on the

region and the historical moment (10).
But if we assume a variant from 400 Hz to 450 Hz, we can see in diagram No4 how this parameter affected the 10th course.

The reduced relation will be as follows:

$$\text{diameter (mm)} = \frac{912}{\text{"A" Frequency (Hz)}}$$

A change of pitch from A-440 Hz to A-415 Hz produces an increase from 2.1 to 2.23 mm in the diameter.

CONCLUSIONS

Based on the above calculations we can say that slight variations in the vibrating length, tension and the pitch of A do not greatly affect the diameter , even when some of them coexist (as, for example, vibrating length and tension). By doubling the specific weight of gut, however the diameter will be remarkably reduced, and, consequently the string will become less rigid.
After a thorough investigation on the above mentioned HARTON lute kept in the City Museum of Bologna (but the same is valid for many other lutes) we can say that this instrument has a vibrating length of 697 mm and does not seem to have been modified. If the first string has the frequency of today's G, the 10th course will be a 65.4 Hz, "C". Simple gut having a tension of 3 Kg will give us a string diameter of 1.9 mm. By decreasing the tension to 2 Kg the diameter will in turn decrease to 1.5 mm. But the bridge's hole is only 1.3 mm.!
To allow a string with a tension of 2 : 3 Kg pass through a hole of the above size, the gut's density should be 1.6 and 2.5 times that of simple gut, compared to the above tensions. If we consider an instrument having the first string in modern E, the diameters would increase, according to the such tensions, by 1.82 and 2.23 mm respectively.
Persuaded by the above observations, I began a series of tests in 1983, to verify whether the gut really possessed a suitable capacity to retain mineral salts.
I treated ten samples of gut string of different origin in a copper acetate. All samples took a blue colour, which meant salt retention and showed the way to follow.
I organized my research in the following way:

1. Study of old treatises about the dyeing of fabrics, leather and general technology, and of the modern techniques for treating silk with mineral salts (11).

2. Treatment of commercially available gut string samples (unfortunately I was unable to find fresh gut)

3. Iconographic information concerning dyed strings

4. Research in the archives of cities where in the 17th century some string makers were located, such as Bologna, Rome, Pistoia, Florence in Italy, and Lion, Munich etc, abroad.

5. Setting up of a method of qualitative chemical analysis on historical samples of gut string, of very simple application even for non-professional researchers.

For the moment we will deal with items 1 and 2 only.

EXAMINATION OF HISTORICAL TECHNOLOGICAL TREATISES

It was necessary to examine some treatises of 16th and 17th century dealing with fabric dyeing and general technology, in order to verify on gut the materials and the methods available at that time for silk and especially for leather dyeing.
I decided to skip the various recipe books dating up to the early 16th century and focused my attention on the first actual treatise for fabric and leather dyeing specialists: **"Plictho de larte de tentori che insegna a tenger panni, telle et sede si per larthe magiore come per la comune"** by Giovan Ventura Rosetti (Venice, 1540) (12) and on numerous other treatises on the technology of that time, such as for example: **"la piazza di tutte le professioni del mondo"** by T.Garzoni (Venice, 1579), **"I secreti"** di Don Alessio Piemontese (Venice, 1555) etc.
But let's come back to the 1st treatise: "Il Plictho", by Rosetti. After thorough reading I summed up the various chemical substances that were used at his time for dyeing silks and cloths and that could effectively be employed to the treatment of gut.
Together with getting to know a lot of dyeing secrets I learned that, among the cities where silk dyeing and spinning were very renowned there were also very important string manufacturing centres. We could assume that string makers learned to treat gut based on technologies used by fabric dyers.
It was very interesting also to observe that some Italian towns that were renowned as string manufacturing centres, such as Rome, Florence, Pistoia etc., are located in a territory particularly rich in raw materials used in dyeing, as well as string making.
During the examination and summary of these historical treatises I met with the problem of "translating" the recipes therein contained into a modern chemical language. Old books are very difficult to interpret for many reasons. For example, it is hard to understand the actual chemical content of some alchemy-like recipes requiring the use of "drunken men urine", or "bull blood".
The investigation about modern treatises on silk dyeing and salt loading (13)(14) was thus fundamental in order to

isolate some specific processes used for this fiber (with an increase of two to three times the silk's weight after treatment) that could as well be employed on gut. It can be observed that some modern techniques employ processes and salt used in the 16th and 17th century for normal fabric and leather dyeing. The only limit was that the bath temperature could not exceed 45°C, or the gut could degenerate.

THE METHOD

Silk loading treatments are essentially based on the technique of letting a salt solution be first absorbed by and then fixed into the fiber, by means of suitable agents. The even absorbption of the salts in the fiber is favoured by other substances. In the 16th century these substances were represented by gum arabic, lemon juice, animal glue, soaps, etc. They will become very important for the obtention of really effective loading (15).
The dosage of these substances being merely experimental, this a particularly difficult field.

METHODS OF EXPERIMENTAL LOADING OF COMMERCIALLY AVAILABLE GUT

After a screening of technologies that could be employed on gut according to old treatises I carried on my test by taking a piece of string of commercial gut (20-30 mm long) loading it on an analytical balance and successively submitting it to a loading process.
The ratio of the post- loading weight to the pre-treatment weight gave the so-called yield.
The practical tests have been subdivided into four "generations" according to the technical-scientific information I was acquiring with the time. Each "generation" was made up of 20-30 different loading baths.

First Generation

After the preliminary investigation on gut, with copper acetate (mentioned above) some different loading techniques were taken into consideration, which could permit the

development of a precipitation of chemical salt inside the fiber, independent of the influence of all other substances and chemical-physical parameters tested later on. Nearly all baths taken into consideration were based on historical dyeing processes, and centered on the use of organic derivatives (such as tannins) or minerals (such as general metal salts) or their combinations.
The best results were around 1,2 - 1,3 times the weight of the non-loaded gut.

Second Generation

By the second generation of tests I attempted to evaluate the influence of chemical and physical parameters such as temperature, loading time etc. on the preceding processes. But I later discovered that, due to some errors, the loadings only reached values of 1.4 times.

Third and Fourth Generation

With these series of tests I verified the influence of chemical substances on the loading process. I used a sample of only 0.2 mm. of diameter with controversial results.
It was nevertheless interesting to verify that a sample reached 2.3 times its weight. However, its diameter also increased slightly.
I then established a general experimental loading procedure that could be applied to commercially available gut strings. This method allowed me to load the samples by about 1.5 times their original weight, with a limited increase in their volume.
As I wished to get a loading of at least twice the untreated gut, I found it necessary to draw a critical analysis of the work I had been doing (that included 250 tests with historical and non-historical combinations).I then stopped the phase of commercial gut experimental loading following some considerations:

1) The gut of the strings used, by now dried, had certainly lost, unlike fresh gut, the property to retain chemical substances.
Preliminary rehydratation techniques could only partially fill this large gap.

2) The string pieces might have been subject to some superficial treatment with oily and/or water-repellent substances.

3) The experimental loading was made on larger diameter strings compared to that of the individual strands of gut of

which the string was composed (the strands could perhaps be loaded separately when fresh and then spun together).

I tried to solve the problems of items 1 and 2 I looked for several degreasing and rehidratating systems, with not very encouraging results. As for item 3, there was nothing to do: the loading only placed itself on the external circumference of the string's section without penetrating to the middle, which is a phenomenon tanners know very well (16).

FRESH GUT LOADING

I finally could start a first generation of tanning tests on fresh gut in strands, put at my disposal by a company located in Salle near Pescara (Italy). I soon obtained quite remarkable results.
I used inorganic metal salts for the first test. I could see that gut became more fragile, probably due to the acidity of some of the salts I used. In any case the loading obtained were around 1.5 to 2.7 times the untreated gut.
By the second generation I could verify all the possible combinations I knew, and thus find out most effective gut loading techniques.

CRITICAL EXAMINATION OF RESULTS ON FRESH GUT

It was proven that metal linked with organic substances (tannins, acetates etc.) give very strong loadings (twice, four times) but also cause remarkable increase in the volume of the gut piece due to the great steric mass of the molecule used for the process.
From several writings on this subject it results that the density of these kinds of salts is quite light if compared to other salts of inorganic nature (17). I thus decided to exclude all inorganic matter combination in favour of metal inorganic products having a higher density, although a certain volume increase in the animal fiber still takes place in this case too. I later introduced a new important loading technique based on the experimental observation that fresh gut strands reddily incorporate powders coming from high-density insoluble matters kept in a water suspension.
Through a preliminary test I soon obtained very high loadings (twice,four times the original weight) with a reduced volume increase (practically negligible with increase in load of twice,three times). The most important result was that gut did not deteriorate by the chemical attack of the fiber as it had been with the preceeding baths. It thus kept the original strength. In other words, it simply acted as a support for the loading material. I named this method "dry technique" to distinguish it from the former "wet techniques".

With these tests I decided to conclude the experimental phase of my work, and to attempt to manufacture loaded gut strings employing the "wet technique" and the "dry technique"(with insoluble powders). I decided to produce loaded gut having a final diameter of 1.5 mm for comparison as well to consider a 10th course string.
Four loadings were done for each technique I employed; for three of them I used some chemical substances (glues), two of the "historical" type (18)(ex.Arabic gum,fish glue etc.) and one of the modern type (ex. polyvinile glue etc.); the fourth sample was spun after loading, without employing any glue.
We made high torsion strings, so as to make the most of this technique's peculiarities on the elasticity parameter (19).

In the following diagram I summarize the tests carried out:

A) - **referring non-tanned gut string**

B) - **wet loading**
- with no glue
- with 1st "historical" glue
- with 2nd "historical" glue
- with modern glue

C) - **dry loading**
- with no glue
- with 1st "historical" glue
- with 2nd "historical" glue
- with modern glue

The strings obtained are coloured in dark brown or in varying gradations of red depending on the type of loading employed (20).

EXAMINIMG THE RESULTS

In order to evaluate the loading obtained I applied the same tension and vibrating length to each sample of the strings produced and measured the frequency of the note obtained.
Now, we could notice, with same diameter (1.5 mm.) an increase of 1,8 to 2 times of the specific weight with the "dry" method, which permitted a frequency decrease between a major third and a perfect fourth in the note produced by the strings.
I could also verify that the "wet" tanning does not produce remarkable increases in the density (1.3 times maximum) and that with this method strings become rather rigid. I thus decided to abandon this technique definitely. We unexpectedly noticed that the "dry" treated strings were very soft to the touch, different from the untreated referring sample and the "wet" treated strings. This is also due to the kinds of glue employed, except for the twisted strings which were not treated with any glue. In fact these strings were discarded as being defective.

CONSIDERATIONS ON SOUND

After the preceeding selection the strings produced have been

tried on a 13-courses lute with minor D tuning.
We compared them with homologuous overspun strings, with encouraging results, if we consider their experimental nature (liable to be further improved). Compared to the sound of the modern wound strings, the sound produced by these strings is a little less strong and the tone deeper (now the octave coupled to basses found a justification!)
The vibrations of these strings last about half time as the modern wound ones'.
In table 1 are indicated the diameters of basses employed for a baroque 13-course instruments (A=440 Hz) with vibrating length of 710 mm (and 760 mm. for the 12th and 13th course), and tenions of 3.0 Kg. per each treated gut string, if we consider, to be cautious, a density increase by 1,8 the untreated gut.(But it is also possible to reach values of 2-2.5 times the density).
Future experimental tests will aim to improve the technological process and obtain the best sound results, taking into consideration several factors (glues, loading, twisting etc.)

CONCLUSIONS

We have hereby tried to prove that gut loading techniques can give a satisfactory response to the numerous questions asked in this article's preface. The results might be valid for other string instruments where such strings should be used.

Mimmo Peruffo
via Costantini 16
36100 Vicenza
ITALY
tel. 0444/960773

TAB.1

Courses	Diameter mm.
5th	0.60
6th	0.80
7th	0.90
8th	1.00
9th	1.10
10th	1.20
11th	1.35
12th	1.45
13th	1.60

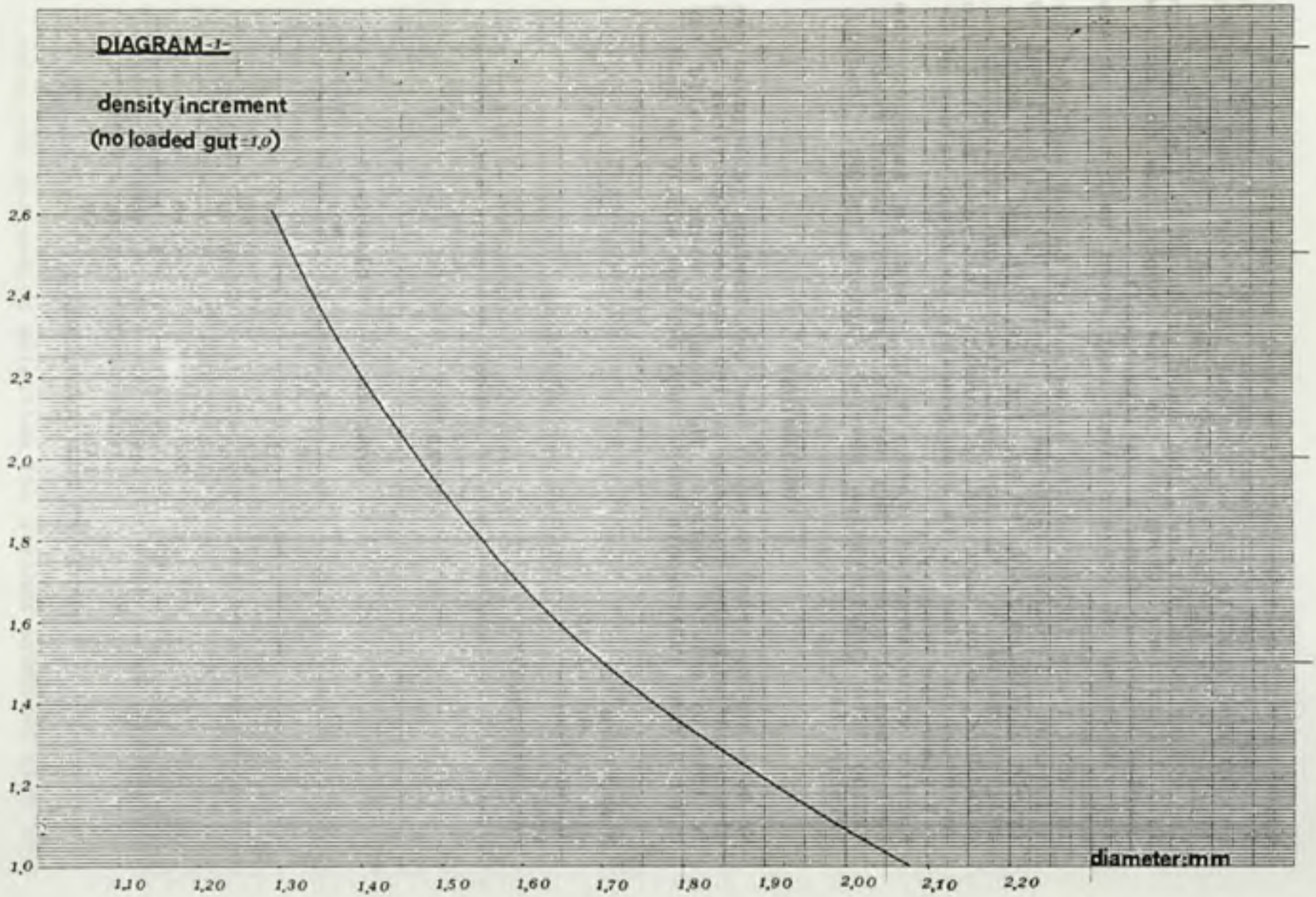
DIAGRAM -1-
density increment
(no loaded gut = 1,0)
2,6
2,4
2,2
2,0
1,8
1,6
1,4
1,2
1,0
1,10
1,20
1,30
1,40
1,50
1,60
1,70
1,80
1,90
2,00
2,10
2,20
diameter:mm

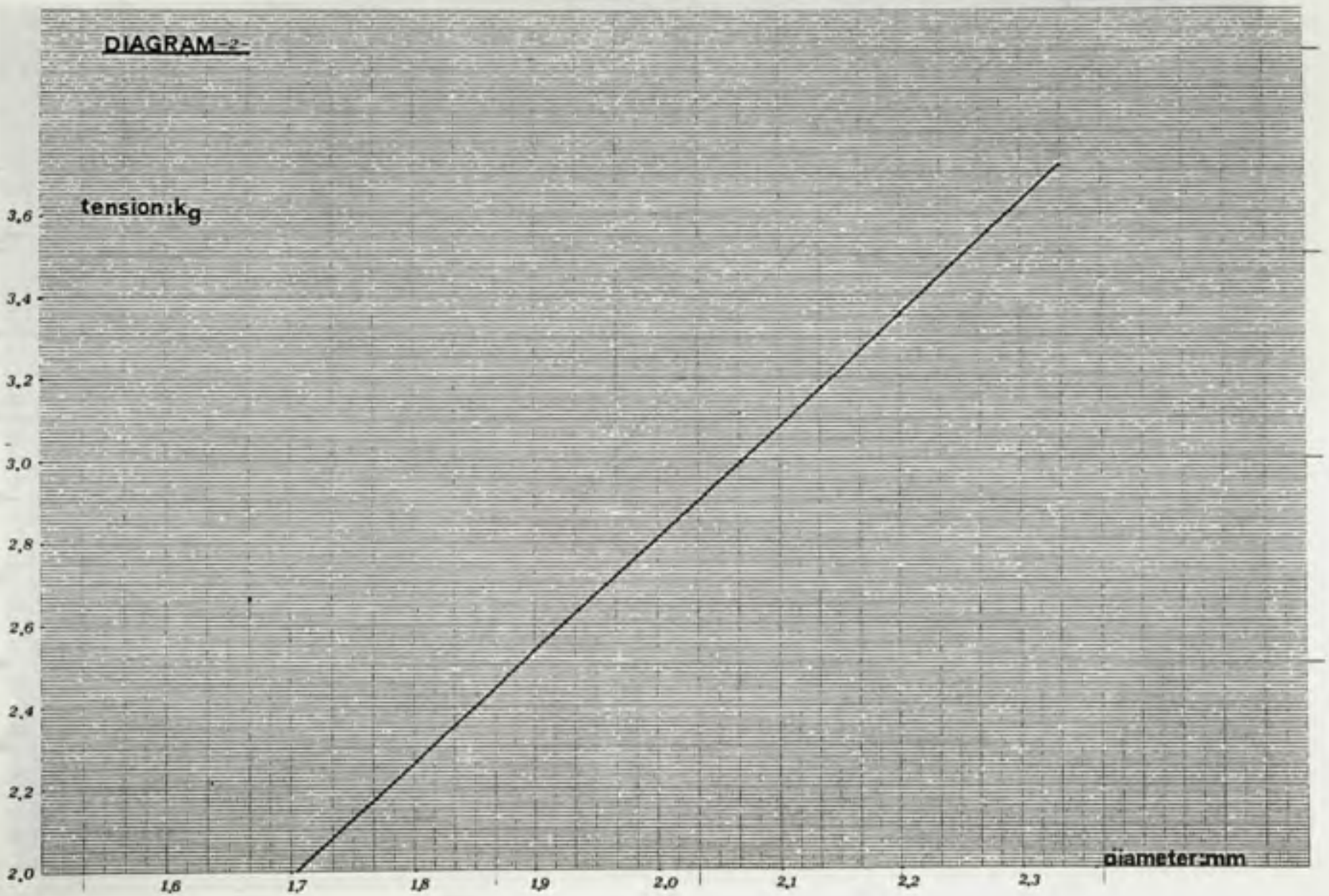
DIAGRAM -2-
tension:kg
3,6
3,4
3,2
3,0
2,8
2,6
2,4
2,2
2,0
1,6
1,7
1,8
1,9
2,0
2,1
2,2
2,3
diameter:mm

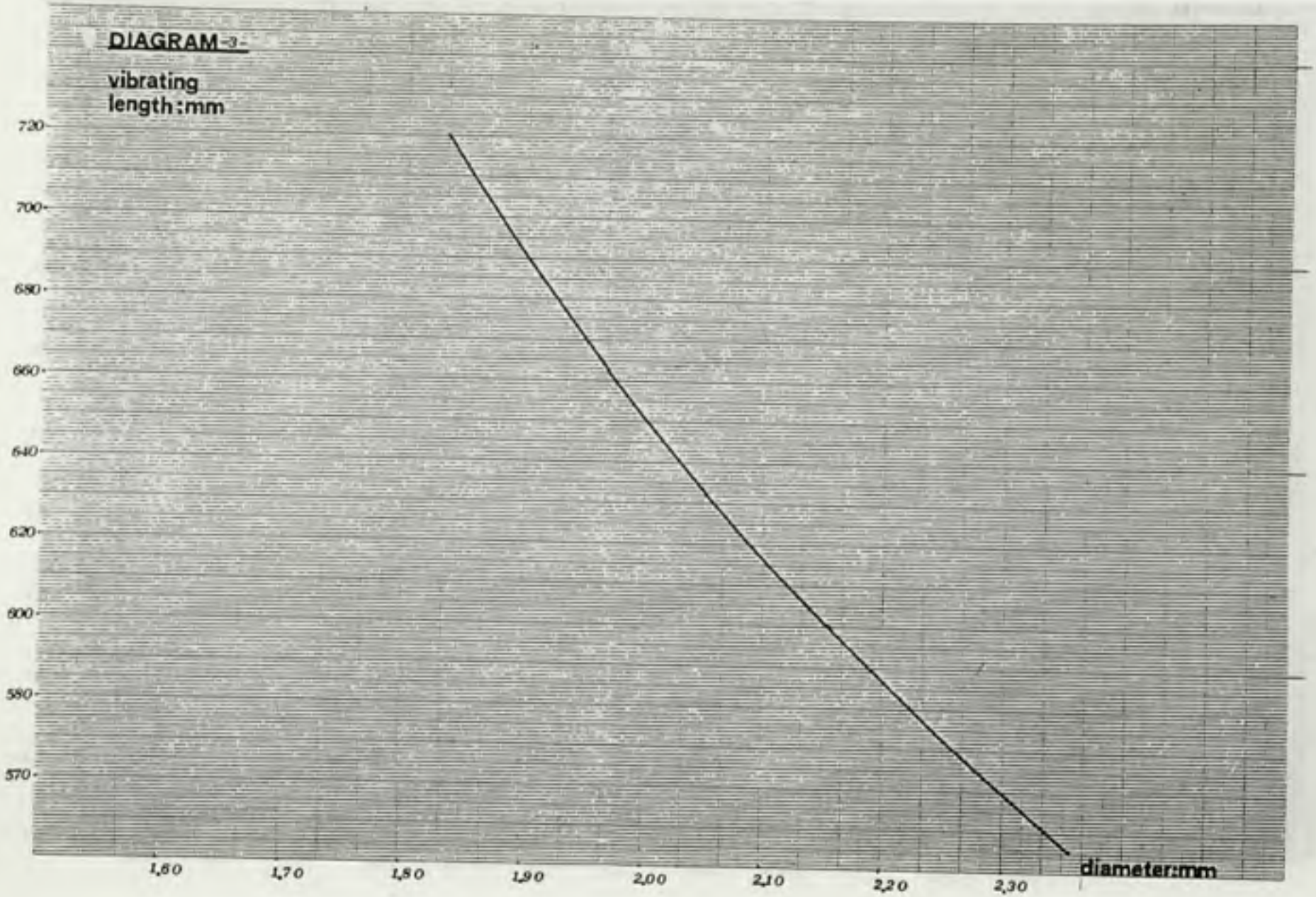
DIAGRAM -3-
vibrating length:mm
720
700
680
660
640
620
600
580
570
1,60
1,70
1,80
1,90
2,00
2,10
2,20
2,30
diameter:mm

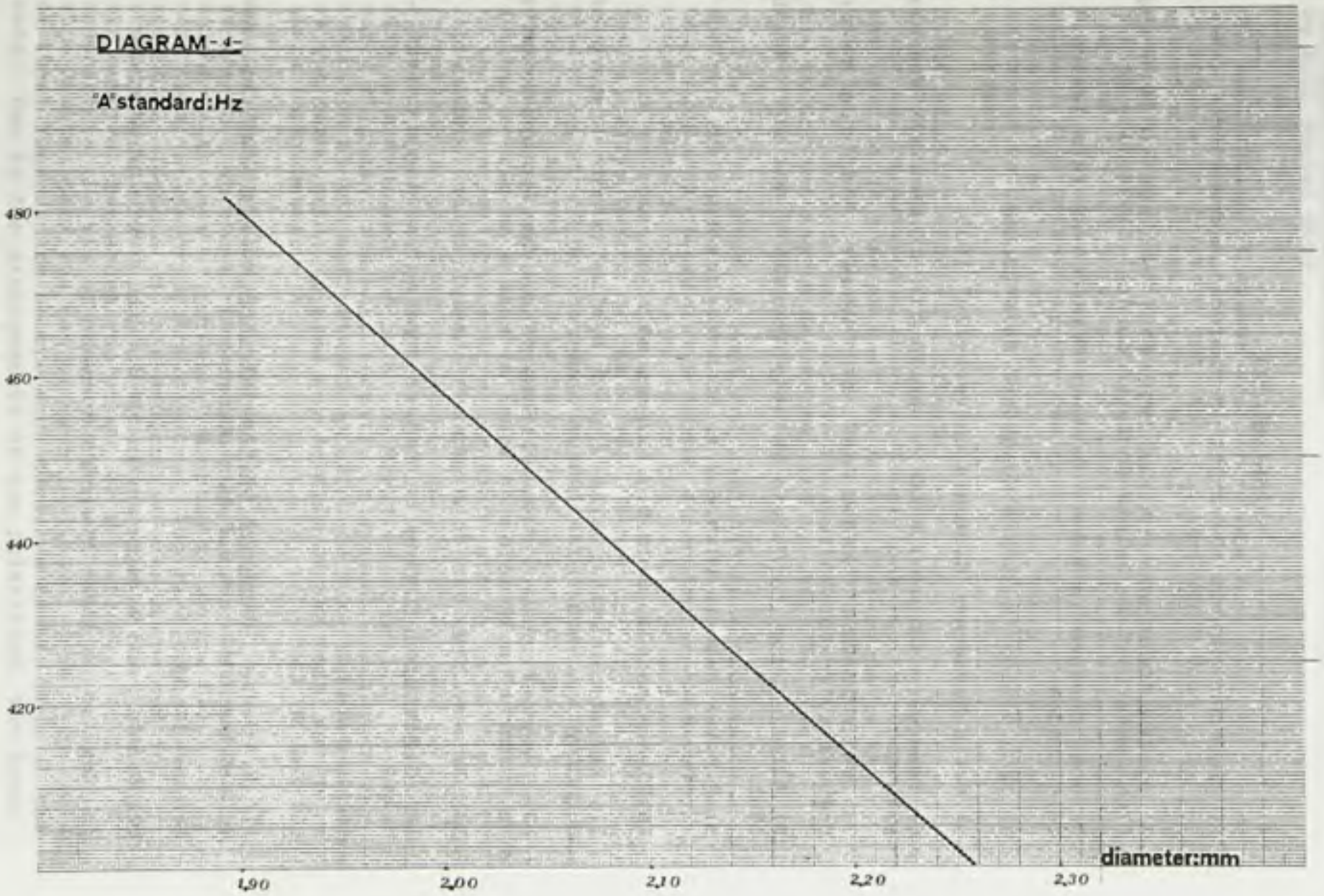
DIAGRAM-4-
"A"standard:Hz
480
460
440
420
1,90
2,00
2,10
2,20
2,30
diameter:mm

BIBLIOGRAPHY

1) "Introduction to the Skill of Music"- London 1664
- by John Playford

2) Djilda Abbot and Ephraim Segerman:"Strings in 16th and 17th Centuries" in Galpin Society Journal - 1974,July 20.

3) John Dowland in Robert Dowland "Variété of lute lessons" 1610 London

4) Thomas Mace "Musick's Monument" 1676 London

5) Marin Mersenne: Harmonie universelle" 1635

6) Francesco Griselini "Arts and Crafts Dictionary" Venezia 1770 abt.

7) Biblioteca Angelica of Rome: "String-maker University'statute" (1646)

8) Albert Cohen in Galpin Society Journal - vol.36 - March 1981

9) R.F.Van Pelt in FO M.R.H.I. BULL.9 - Ottobre 1977 comm.83

10)E.Segermann in FO M.R.H.I. comm.83

11) Franco Brunello: "The Art of Dyeing in the History of Humanity" - Neri Pozza 1968 - Vicenza

12) Franco Brunello: "The Plichto di Giovan Ventura Rosetti in "Laniera" n.10 1970

13) Gansser "The Tanner's Manual" - Hoepli 1949 - Milano

14) G.Panizzon "Guide to Modern Dyeing" - Hoepli 1927 - Milano

15) See No14

16) See No 13

17) N.A.Lange "Handbook of Chemistry" - ed.for Italy by uses Scientific Editions S.P.A. - Firenze

18) see No 11

19) D.Abott and E.Segerman in FO M.R.H.I COMM3:GUT STRINGS"

20) See T.Mace 1676:"Musick's Monument"

FoMRHI Comm 1022

A Dynamic Harpsichord Action December 20, 1990

by Bill Napier-Hemy

The application of hammer actions to the harpsichord in the early eighteenth century provided the keyboard-controlled variations in dynamics and timbre sought after by contemporary musicians but at the expense of the distinctive sound of the plucked string. The development of an expressive plucked-string action has to this day presented a problem that has inspired several solutions of which I am aware and, no doubt, numerous attempts which have not been made public.[1] In this paper I will present my own design for a touch-sensitive harpsichord action which is currently at the prototype stage and seems to hold promise as the basis for a full-scale instrument.

Other Velocity-Sensitive Actions

Most expressive plucked-string actions, including my own, are inertial, velocity-sensitive actions; that is, they depend on the inertia of some part of the action responding to the velocity of the jack movement in a way which affects the amount of plectrum that engages the string during plucking. The faster the key is depressed, the greater the length of plectrum which touches the string.

In 1969, Colin Kerr of Montreal patented an action in which a spring-loaded mass pivoted to an otherwise conventional jack body displaces the plectrum in the direction of the string proportionate to the velocity of the jack's upward movement.[2] A series of somewhat more complex solutions was patented in 1973 by Ellis Barron of San Diego. These are all inertial actions in which the jack itself is impelled towards the string depending on the resistance of its mass to a spring or springs.[3] Barron seems to have found these solutions unsatisfactory and subsequently abandoned the principle of springs acting on a mass in favor of a system patented in 1978 in which the resistance of a pneumatic piston is employed to impel the plectrum towards the string.[4] My knowledge of these inventions is confined to patent specifications and so I can offer no appraisal of their merits. Dynamic harpsichords have also been designed and built by Maendler of Munich[5] in the early thirties, and more recently, a dynamic instrument was exhibited at the 1989 Bruges harpsichord festival, but I have as yet been unable to find any details of the workings of these instruments.

Basic Principle of Magnet-Controlled Action

As far as I am aware, the action that I have designed is unique in the use of permanent magnets to govern the horizontal movement of the plectra. Figure 1 depicts the essential elements of this action, in plan above and in section below. Two long continuous strips of flexible magnet are mounted, one above the other, on a stationary rail adjacent to the row of jacks and a small piece of magnet is also mounted near the top of each individual jack. The poles of these magnets are on the face surfaces rather than at the ends. Due to the arrangements of the polarities, the lower

stationary magnet attracts the jack and the upper one repels it. The jack is a single solid piece, with no moving parts, which pivots at its base on the key-tail and rides in a guide which allows about three millimetres of horizontal movement parallel to the key levers. The plectrum is mounted not in a tongue but directly into a face cut at a diagonal into the jack body (a similar face is cut into the opposite side of the jack to allow it to clear the adjacent string). While the jack is at rest, a greater part of the plectrum's length is directly beneath the string. If the jack rises quickly, the string will be plucked by this length of plectrum before the magnet has pushed the jack away from the string. The slower the jack rises, the further from the string the jack will be when the plectrum contacts the string and the less of its length will do the plucking.

Adjustment of Magnet Rail

The point at which the small magnet mounted on the jack crosses over between the opposing polarities of the stationary magnets corresponds to the point at which the plectrum is two to three millimetres below the string. This crossover point can be adjusted by raising or lowering the stationary magnet rail. The rail must be adjusted in such a way that upon ascent, the jack starts moving away from the string before the plectrum comes in contact with the string. On its descent, the jack is repelled away from the string until the plectrum is below the string. Having cleared the string, or having plucked it only lightly, the jack enters the field of the attracting magnet and is pulled back toward the string.

The horizontal proximity of the stationary magnets to the row of jacks is also an important factor in the smooth working of the action. The magnets must be close enough to act upon the jacks but not so close that the magnets touch. In the current prototype, the space between the stationary magnets and the jack-mounted magnets, while the jacks are at rest, is about three millmetres.

Orientation of Strings

Aside from the novel features essential to this action, namely the assembly of magnets which governs the horizontal motion of the jacks, the reader will notice certain other details in which the design departs from the conventional harpsichord action; these changes have been made in order to facilitate ease of construction and maintenance, and to solve technical problems peculiar to this type of action.

The most visible of these features is the forty-five degree orientation of the strings to the key levers. An earlier version of this action retained the normal harpsichord arrangement in which the strings are parallel to the key levers. This required that the horizontal movement of the jacks be in the same line as the row of jacks itself and involved a separate pair of stationary magnets for each jack. This arrangement worked but proved difficult to build and to adjust. The present design with a single rail bearing the stationary magnets in two continuous strips is much easier to make and has the advantage of allowing global adjustments.

With this arrangement the jack's horizontal play is at ninety degrees to the row of jacks which necessitates the placement of the strings at an intermediate angle for the action to work. The closer the strings are to being parallel to the key levers, the less the horizontal movement of the jacks affects the amount of plectrum to contact the strings, resulting in a decrease in the dynamic range. Conversely, the closer the strings are to being at right angles to the key levers, the less room there is between the strings for the jacks. A compromise of forty-five degrees has been chosen for the current prototype, but further experimentation may yield a better angle. A full-scale instrument designed around this string angle would have a shape that would be something of a cross between a harpsichord and a bent-side spinet. Such an instrument would also have a soundboard with less surface area than a conventional harpsichord.

Magnet at Base of Jack

Another feature peculiar to this design is the use of magnet to secure the bottom of the jack to the key-tail. A small square magnet is glued to the bottom of the jack and sits on a disc-shaped magnet of opposite polarity which is set into a recess in the key-tail. This holds the jack in place, allows for its easy removal and, most importantly, allows the jack to pivot at its base. Experiments with axles all presented problems with removal of the jack and were more difficult to make than the present system.

Damper and Register

The placement of the damper on the jack body and its damping of the string from the side rather than from above is made possible by the jack's horizontal movement and the attraction of the jack to the lower stationary magnet which maintains the pressure of the damper felt against the string. With this arrangement, the damper not only silences the string but also limits the forward movement of the jack. Thus, the register guide slots need only have three sides, the job of the fourth being taken up by the damper. This also simplifies construction of the register which need only be a series of slots cut into a batten, in this case an aluminum bar. A felt-covered batten is also attached to the underside of the register to prevent the jack from clattering against the rear of the slot as it is impelled towards it by the upper stationary magnet.

Cam-screw and Voicing

Mounted in the wrest-plank, between the nut and the wrest-pin, is a cam-screw consisting of a short length of steel rod, the upper part of which has been hammered flat. The string bears against this before passing over the nut, allowing a fine horizontal adjustment of the string effected by turning the cam with a normal tuning hammer. This horizontal adjustment determines the proximity of the plectrum to the string during the return of the jack to rest, and also during its slowest ascent. In both cases the jack is at its furthest point from the string. The prototype is presently set up in such a way that the plectrum clears the string on its descent if the vibration of the string has subsided, but will engage the

string lightly if the string is still vibrating with a moderate amplitude, resulting in a buzz similar to that on the return of a conventional harpsichord jack. With this setting, a very slow depression of the key will result in the plectrum clearing the string entirely. This can make the playing of *pianissimo* passages difficult, a problem which will be discussed further below. It is worth noting that both Kerr's and Barron's actions also allow for the plectrum to clear the string upon the jack's return to rest. The capacity for this seems to be inherent in this type of action in which the horizontal position of the plectrum is a function of vertical velocity.

Voicing for the loudest pluck is similar to voicing on a conventional harpsichord in that both the length and stiffness of the plectrum are taken into account. In carrying out this part of the voicing, one must keep in mind that an overly loud pluck will result in a rather unpleasant pitch change in which the note begins noticeably sharp and quickly falls back down to pitch. To some this may seem undesirable, but it may well be useful as a musical effect, as it often is for guitarists who occasionally pluck a string sharp.

Touch and Further Refinements

In playing the present prototype, I have observed several aspects of the touch which are worth noting. As mentioned above, *pianissimo* playing is difficult. Attendant with this is the near impossibility of playing fast trills and other similar rapid passages quietly. To produce a quiet pluck, the key must be depressed very slowly and deliberately, yet not so slowly that the plectrum clears the string entirely. This difficulty is partly due to the player's sensation of an unevenness in the key's resistance while being depressed. Through the key, the player initially feels the jack's resistance to being moved from rest as it is within the field of the attracting magnet. Having set the jack in motion, the player then senses the resistance of the plectrum to the string as it plucks. In an attempt to minimize these sensations, the key-tails are weighted in order to increase their inertia, and the balance points of the key levers have been moved back to a point about half-way along their length to increase the player's leverage and control over the movement of the jack. Both these changes improve the feel for the player; however, the determination of optimum weights and balance points must await further experimentation.

The difficulty in playing *pianissimo* passages on the present prototype is also due, in part, to the abruptness and unevenness of the jack's movement away from the string upon its ascent. This may require the use of more powerful magnets to exert a more predictable force upon the jacks. An earlier one-note version of this action employs a heavier but stronger type of magnet, which seems to provide a more reliable response than that achieved on the present one-octave prototype. Another change being considered is the addition of a second set of magnets to help move the jacks which would mirror the existing set. This would entail mounting a magnet-bearing rail to the player's side of the row of jacks, and

corresponding small magnets on the jacks themselves. The poles of the these magnets would be arranged in such a way that the lower stationary magnet repels the jacks and the upper one attracts them. This would reinforce the action of the existing set of magnets and may result in the horizontal movement of the jacks being less abrupt and easier for the player to control.

Another feature of an earlier version of this action which may be worth reinstating is the ability to fine-tune the height of the small magnet mounted on the jack. This was done very crudely on the earlier model by mounting the magnet on a pin protruding from the top of the jack upon which the magnet could slide up or down while being adjusted, but which would hold the magnet in place during normal playing. A more stable contrivance allowing this sort of adjustment may be worth pursuing as the height of these small magnets is crucial to the response of the action. It would be preferable, however, to avoid this entirely by making the jacks sufficiently uniform so that only the adjustment of the stationary magnet-rail would be necessary.

Continued work on this action will entail experiment with a number of additional details including, among other things, the differing responses of bass and treble strings to the dynamic action, choice of string gauges and tensions, plucking points across the range of the instrument and plectrum material and shape. Despite the flaws in the present design, I believe the basic principle of using magnets in this type of velocity-sensitive plucked string action holds enough promise to warrant further experiment with small prototypes and the eventual construction of a full-scale instrument.

Readers wishing to see the prototype of this action may make arrangements to do so by contacting me, care of Lewis Jones at the London College of Furniture, Music Technology Department.

[1] I am concerned only with keyboard-controlled expressive devices and not with pedal-controlled swells or multiple registers intended to overcome the dynamic limitations of the harpsichord.

[2] Colin C. Kerr, Expressive Harpsichord Action, Canada Patent No. 821,222. Issued August 26, 1969.

[3] Ellis Barron, Plectrum Operating Means, United States Patent No. 3,777,612. Issued December 11, 1973.

[4] Ellis Barron, Plectrum Piano Action, United States Patent No. 4,099,440. Issued July 11, 1978

[5] Passing reference is made to Maendler's "Bachklavier" in the harpsichord entry in The New Grove Dictionary of Musical Instruments (MacMillan London Limited) and also in Joseph Wörsching's Die historichen Saitenklaviere und der moderne Klavichord und Cembalobau (Mainz 1946), but no details of the instrument's action are provided.

Figure 1

1. Jack rail with felt padding
2. Magnet-bearing rail
3. Upper stationary magnet (repelling)
4. Lower stationary magnet (attracting)
5. Small magnet mounted on jack
6. Damper
7. Plectrum
8. Jack body
9. Register with felt-covered batten attached to the underside
10. Soundboard
11. Belly rail
12. Nut (made from steel bar)
13. Cam-screw
14. Wrest pin
15. Wrest plank
16. String
17. Rack
18. Lead weight
19. Felt-covered batten to limit upward movement of key lever
20. Magnet glued to bottom of jack body
21. Magnet sunk into key lever
22. Key lever

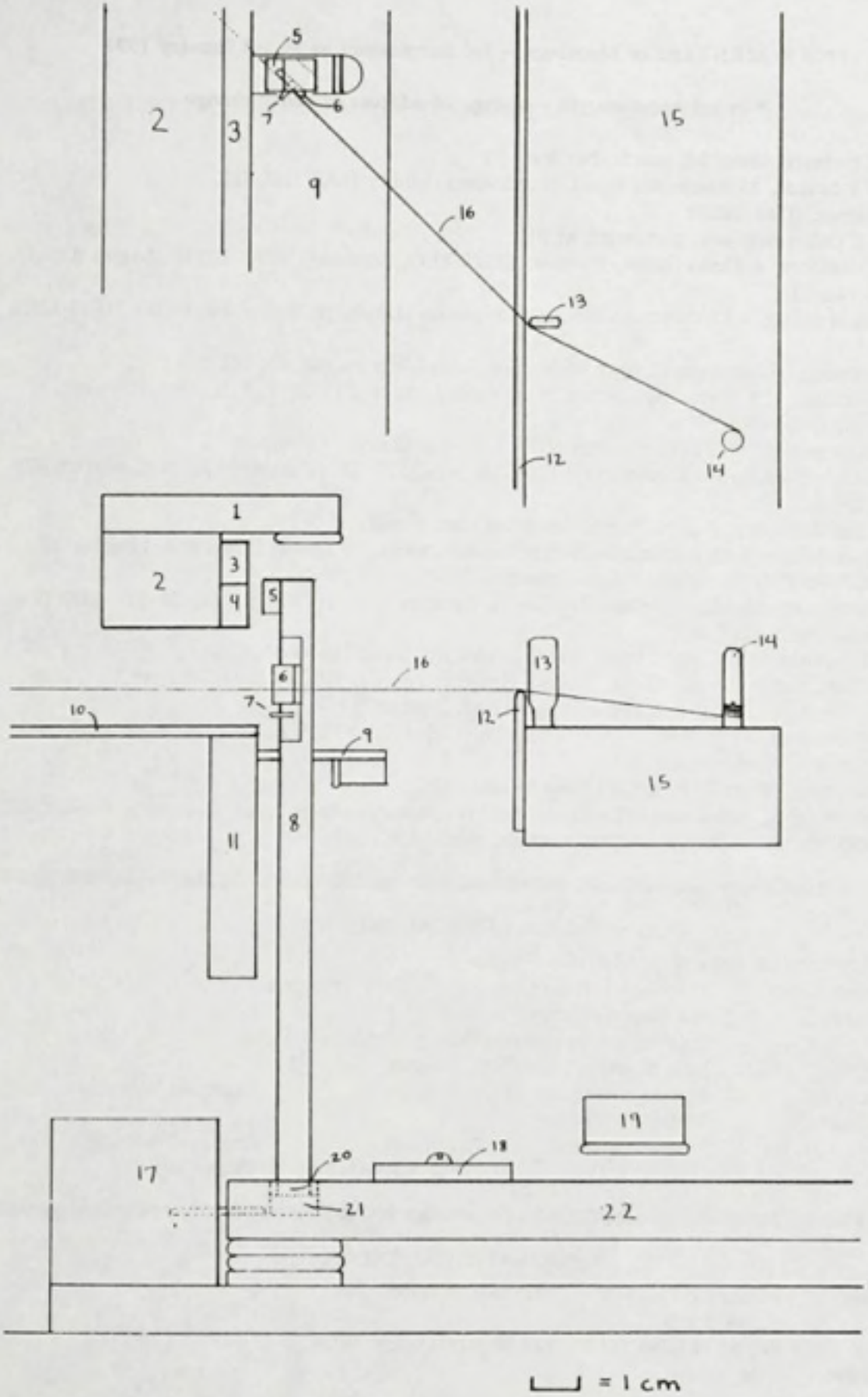
1
2
3
4
5
6
7
8
9
10
11
12
13
14
15
16
17
18
19
20
21
22
= 1 cm

1990 FoMRHI List of Members — 3rd Supplement as at 3rd January 1991

*** in left hand margin - change of address or other change**

* Simon Chadwick, (lute, M; recrdr, bar trav, P).
* John W Edwards, 33 Rochester Road, Northwood, Middx HA6 1NJ, UK.
* Brian Galpin; *0344-20284*.
* Donald S Gill, (early ww, port orgn; M,P).
* Julian Goodacre, 4 Elcho Street, Peebles, EH45 8LQ, Scotland; *0721-22539 (home) 031-556 4151 (work)*.
* Jonathan Harding, 6 Desborough House, Amersham Hill, High Wycombe, Bucks HP13 6HH, UK.
* Jan Hermans, Werkendam 12 (not Wirkendam) (trav, bar recrdr, ob; M).
Poppy Holden, 109 Grove Hill, South Woodford, London E18 2HY, UK; *081-530 5404*.
* Paul Irvin; *(708) 998-9829*.
William Jurgensen, Auf Lämmle Weg 6, D-7128 Lauffen/N., Germany.
* Malcolm Latcham, 2e De Riemerstraat 154-156, NL-2513 CZ 's-Gravenhage, Netherlands; *070-360 2985*.
* The Lutherie Society, Ralph Plumb, Secretary [rest as before].
Bill Napier-Henry, International Lutheran Student Centre, 30 Thanet Street #66, London WC1H 9QH, UK; *071-388 4840* (hpschd, clavchd; M).
Luis Alfredo Nouel M., Apartado No.80356, Caracas 1080-A, Venezuela; *02-979 6552* (lute, theorbo, early gtar; M,P).
* Peter O'Donnell, 308 Court Street Place, Iowa City, IA 52240-4655, USA.
Antek Pilch, Krowoderska 19-20, 31-191 Krakow, Poland; *229763* (lute; M,P,res,T).
* Martin Pühringer, A-4171 St.Peter/Wbg.Nr.342, Austria.
* Trevor Robinson, 20 Suffolk Walk. U.A.E., Norwich NR4 7TJ, UK.
* Huw Saunders, (lute, virgnls; M).
* Pietro Sopranzi, Viale D.Piva 12/1 [rest as before].
Matthias Wagner, Amoltertalgaße 17, D-7818 Vogtsburg - Schelingen, Germany; *07662/1602 + 1896* (str instrs, lute, vih, cittn, mandln, gtar; M,R).

ORGANOLOGICAL INDEX

String Instruments general:	Matthias Wagner		
Harpsichord etc:	Bill Napier-Henry,*h*	Huw Saunders,*v*	
Clavichord	Bill Napier-Henry		
Lute:	Luis Nouel	Antek Pilch	Matthias Wagner
Guitar:	Luis Nouel	Matthias Wagner	
Vihuela:	Matthias Wagner	Cittern etc:	Matthias Wagner,*c*
Mandoline:	Matthias Wagner		
Transverse Flute:	Simon Chadwick	Recorder:	Simon Chadwick
Organ:	Donald S Gill	Double Reeds:	Euan Curtis

GEOGRAPHICAL INDEX

Germany:	William Jurgensen	Matthias Wagner
Poland:	Antek Pilch	
London:	Poppy Holden, E18	Bill Napier-Henry, WC1
Venezuela:	Luis Nouel	